LIGHT SKY



PIKE

Outdoor LED Strip Light

IP66 · RoHS · RDM · DMX 512 · Art-net

FEATURES

- PIKE is an IP66 waterproof strobe bar light.
- It adopts 672pcs 0.5W RGB LED and 112pcs 3W Cold White LED.
- This light not only features classic strobe function and smooth uniform dimming but also boasts a unique electronic frost effect, can creat colorful strobe rendering effects and many color-changing chase effects.
- It has a smart and compact appearance design. The housing is made of aluminum alloy, small size and light weight, and equipped with built-in splicing pins for quick connection.
- It is highly suitable for entertainment venues such as outdoor variety shows, music festivals, concerts, bars, and night-clubs.

Unit: mm

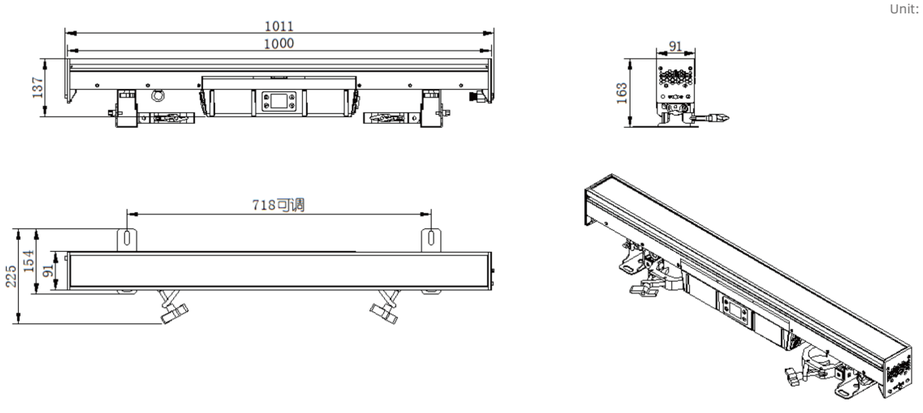

Light source and Optics

- Light source: 672 x 0.5W RGB LED and 112 x 3W Cold White LED
- Beam angle: 71.5°
- Field Angle: 114°
- CRI: Ra≥80
- Light Source Theory Life Span: 20,000 h

Effects

- Color mixing system: Uniform RGB color mixing system and rainbow effect
- LED Control: RGB 32-zone controllable, cold white 16-zone controllable, create outstanding transformation effect
- Effect macros: Static effect macros and dynamic effect macros
- Dimming: Electronic dimming with four dimming curves
- Strobe: 1-30Hz electronic strobe and random strobe

Control and Programming

- Control channel: 15CH (standard), 07CH, 70CH, 117CH, 68CH, 65CH, 33CH, 17CH, 112CH, 39CH, 21CH (see channel chart for details)
- Protocol: DMX512 , RDM , Art-Net
- Data connection: 3pin(default) or 5 pin(optional) , RJ45(Art-Net) input/output
- Display: LCD screen

Software

- Software upgrade: DMX interface
- Temperature control: Intelligent system for LED lifespan

Power and Electrical

- Input Voltage Range: AC 100-240V 50/60Hz
- Max Power Consumption 450W
- Power factor: > 0.96
- Maximum current: 2.1A/220V; 4.5A/100V

Size and Weight

- Product Dimensions: 1000mm × 93mm × 225mm
- Net Weight: 8.8 kg
- Carton Dimensions: 1095mm × 310mm × 170mm
- Gross Weight: 11.9 kg

Other

- IP rate: IP66
- Operating environment: -20 ℃ ~ 45 ℃
- Maximum Surface Temperature of Fixture: 65 ℃
- Connection System: Built-in splicing pins for quick connection between fixtures

Standard Packing Accessories(Carton)

- Power Cable: 1 pc
- Signal Cable: 1 pc(3 core (default)/5 core (optional)
- Safety Rope: 2 pcs
- Clamps: 2 pcs (folding lamp hook)

Optional Packing: Flycase

- Flycase Part No.: B0101180001
- Flycase Dimensions (10 in 1): 1060mm x 700mm x 670mm
- Flycase Gross Weight (10 in 1): 141.9kg

Illumination Diagram

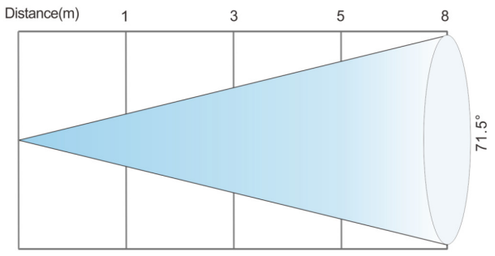

71.5° Lux R	887	99	35	14
G	1960	218	78	31
B	485	54	19	8
W	6370	708	255	100
RGBW	5548	616	222	87
Diameter (m)	1.44	4.32	7.2	11.52

